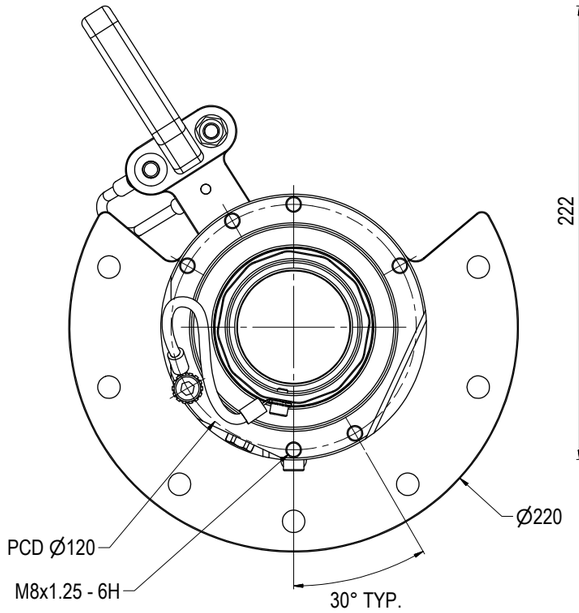

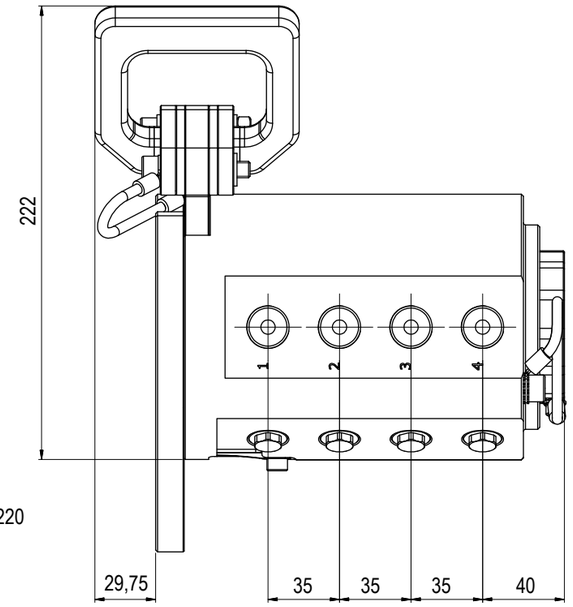

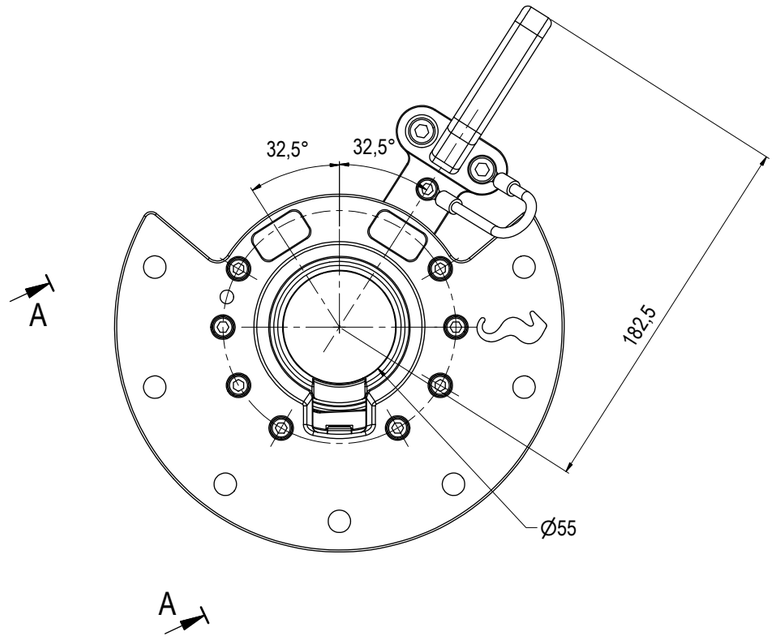

NOTE: 1
DESIGN CODE:
N/A

NOTE: 2
TECHNICAL CLASSIFICATION:

Article Type:	003-Valve Stabs
Main Group:	3.03. Ø55-Valvestab
Intermediate Group:	3.12.02. Receptacle
Sub Group:	3.12.69.4. Quad

NOTE: 3
INTERFACE INFORMATION:

Pressure Rating Bar:	690
Material:	Intervention
Weight:	16,6 kg
Volume:	2,15 dm^3
Surface Area:	4377 cm^2
Hydraulic:	1/2" BSP
Mechanical:	N/A
Electrical:	N/A
Com. & Protocol:	N/A

NOTE: 4
SPAREPARTS:
BB1690

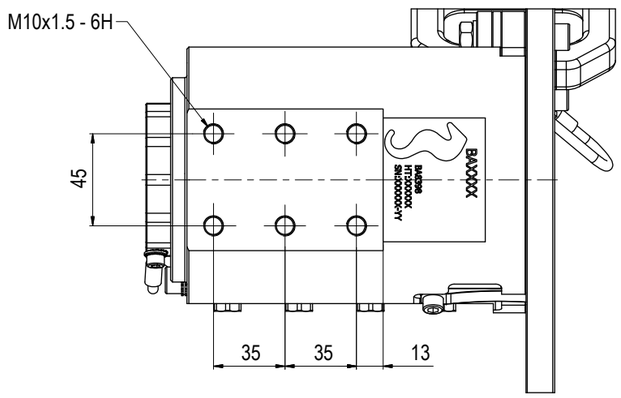

VIEW A-A

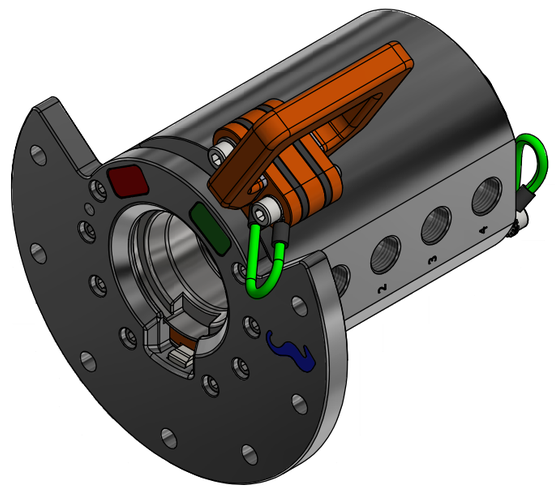

Rev.	Date	Reason for issue	Revision change	Made	Chk'd	Appr.
09	29.5.2024	9-IFU (Issued for Use)		WTJ	HNJ	WTJ
08	30.11.2023	9-IFU (Issued for Use)		WTJ	LGH	WTJ
07	30.1.2019	9-IFU (Issued for Use)		WTJ	LGH	WTJ
06	28.12.2018	9-IFU (Issued for Use)		WTJ	LGH	WTJ

BLUE LOGIC

Dwg Scale: NTS
Dwg Proj:
Dwg Format: A3

Drawing title: Ø55 QP VStab Rec 10k Interv BSP 1/2" wFlange

Drawing number: BB0031

Rev. 09